N0150101

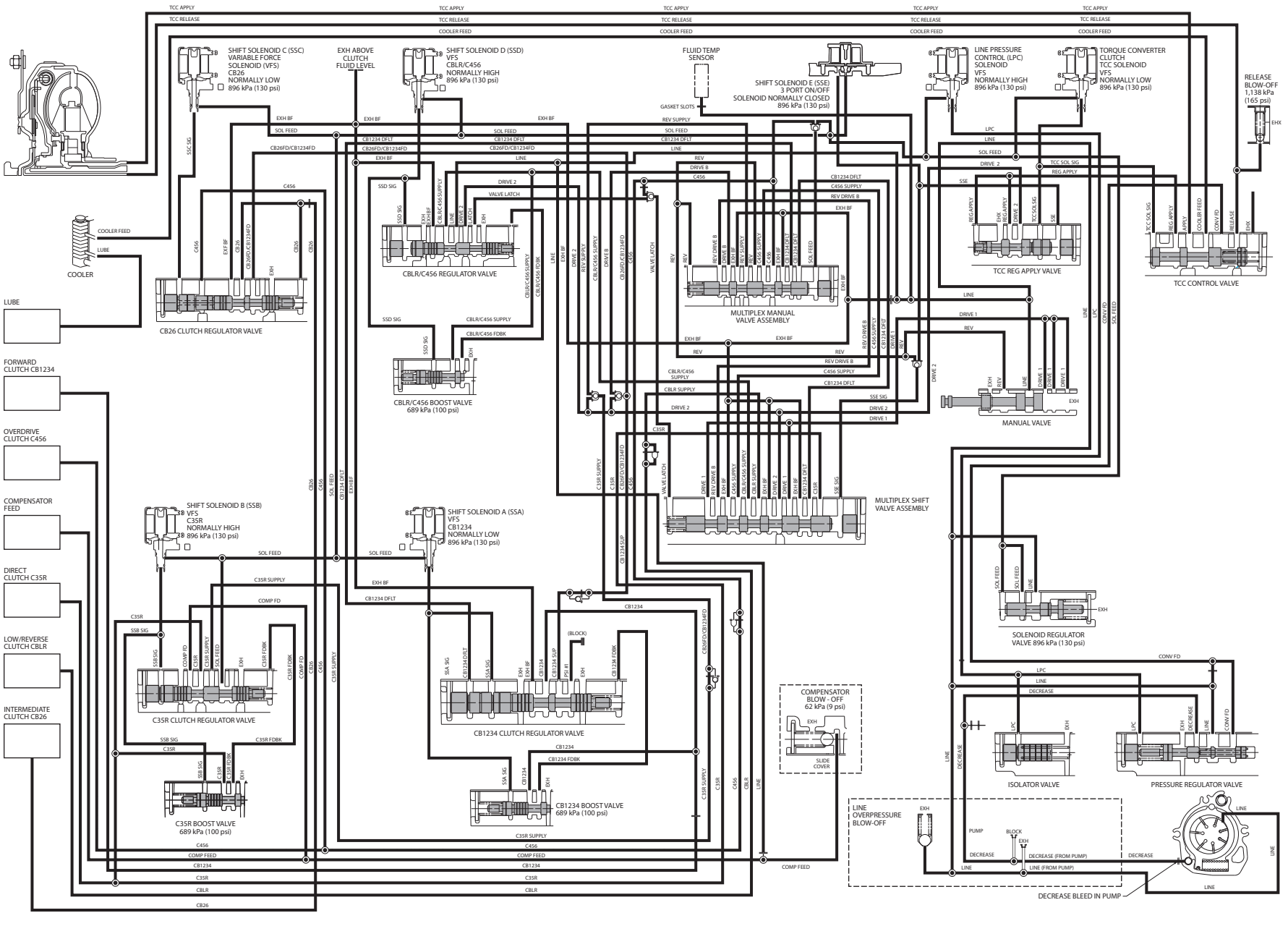

TCC APPLY
TCC RELEASE
COOLER FEED
SHIFT SOLENOID C (SSC)
VARIABLE FORCE
SOLENOID (VFS)
CB26
NORMALLY LOW
896 kPa (130 psi)
EXH ABOVE
CLUTCH
FLUID LEVEL
SHIFT SOLENOID D (SSD)
VFS
CBLR/C456
NORMALLY HIGH
896 kPa (130 psi)
FLUID TEMP
SENSOR
GASKET SLOTS
SHIFT SOLENOID E (SSE)
3 PORT ON/OFF
SOLENOID NORMALLY CLOSED
896 kPa (130 psi)
LINE PRESSURE
CONTROL (LPC)
SOLENOID
VFS
NORMALLY HIGH
896 kPa (130 psi)
TORQUE CONVERTER
CLUTCH
TCC SOLENOID
VFS
NORMALLY LOW
896 kPa (130 psi)
RELEASE
BLOW-OFF
1,138 kPa
(165 psi)
EHX
COOLER
LUBE
CB26 CLUTCH REGULATOR VALVE
CBLR/C456 REGULATOR VALVE
CBLR/C456 BOOST VALVE
689 kPa (100 psi)
MULTIPLEX MANUAL
VALVE ASSEMBLY
TCC REG APPLY VALVE
TCC CONTROL VALVE
MANUAL VALVE
MULTIPLEX SHIFT
VALVE ASSEMBLY
FORWARD
CLUTCH CB1234
OVERDRIVE
CLUTCH C456
COMPENSATOR
FEED
DIRECT
CLUTCH C35R
LOW/REVERSE
CLUTCH CBLR
INTERMEDIATE
CLUTCH CB26
SHIFT SOLENOID B (SSB)
VFS
C35R
NORMALLY HIGH
896 kPa (130 psi)
SHIFT SOLENOID A (SSA)
VFS
CB1234
NORMALLY LOW
896 kPa (130 psi)
C35R CLUTCH REGULATOR VALVE
CB1234 CLUTCH REGULATOR VALVE
C35R BOOST VALVE
689 kPa (100 psi)
CB1234 BOOST VALVE
689 kPa (100 psi)
COMPENSATOR
BLOW - OFF
62 kPa (9 psi)
SLIDE
COVER
SOLENOID REGULATOR
VALVE 896 kPa (130 psi)
ISOLATOR VALVE
PRESSURE REGULATOR VALVE
LINE
OVERPRESSURE
BLOW-OFF
PUMP
BLOCK
DECREASE (FROM PUMP)
LINE (FROM PUMP)
DECREASE BLEED IN PUMP